FIRST ANGLE PROJECTION (ALL DIMENSIONS IN MILLIMETRES)

DRAWING No. 2-80-655-15975

05-228/C

CAUTION THE INFORMATION ON THIS DOCUMENT IS THE PROPERTY OF BHARAT HEAVY ELECTRICALS LTD. IT MUST NOT BE USED DIRECTLY OR INDIRECTLY IN ANY WAY DETRIMENTAL TO THE INTEREST OF THE COMPANY.

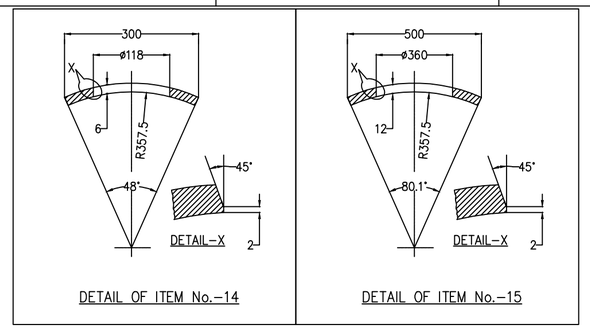

DETAIL OF ITEM No.-14 | DETAIL OF ITEM No.-15

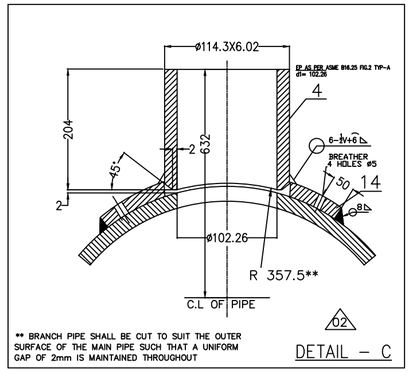

NOTES: ALL DIMENSIONS ARE IN MILLIMETRES

1. DESIGN PRESSURE - 0.2 KG/CM2 (G) DESIGN TEMPERATURE: 440°C
2. FOR STANDARD NOTES OF PRODUCTION AND ERECTION OF PIPES AND TOLERANCE ON FITTINGS REFER DRG NO. 4-80-001-37654 & 4-80-301-26192
3. FOLLOW APPLICABLE QP AND PAINTING SCHEDULE FOR THE PROJECT
4. ALL UNMARKED BENDS/ELBOWS ARE 90 DEG
5. PIPE ENDS SHALL BE BEVELLED AS PER B16.25 FIG.2 TYPE-A
6. GASKET IS SUPPLIED VIDE 7419-80-733 PGMA.
7. FOR ELECTRODE DATA REFER

PIPE SIZE	MATERIAL SPEC	EP FIG	WELD SPEC	ELECTRODE DATA	
				ROOT RUN	FILLER RUN
OD711x6 OD355.6X9.53 OD114.3X6.02	ASTMA516 GR.70	FIG-A	6 V̂	ER70S-2/ E6010/E6013	ER70S-2/ E7016/E7018

8. THREADS SHALL BE UNIFIED(UNC FOR UPTO 1" DIA) AS PER ASME B1.1 WITH CLASS 2A FIT FOR STUDS AND CLASS 2B FIT FOR NUTS.
9. 01 0 INDICATES WELD AT SHOP.
10. 01 ⊗ INDICATES WELD AT SITE.

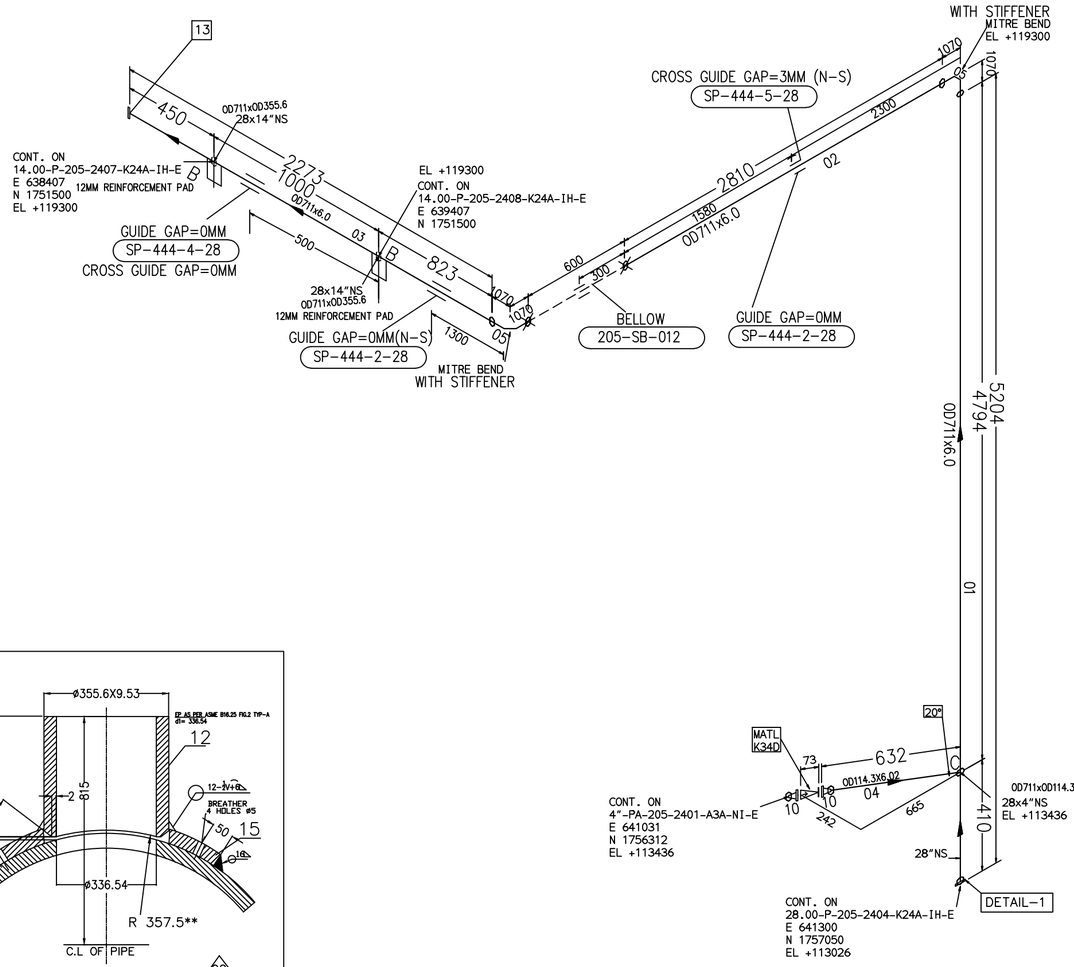

DETAIL-1

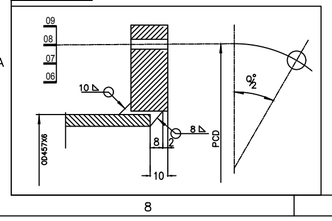

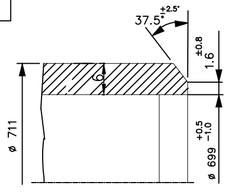

FIG-A
B16.25 FIG.2 TYPE-A

ITEM CODE	ITEM NO.	DESCRIPTION	DRAWING NO.	ITEM NO. / VAR	MATERIAL CODE / MATERIAL SPEC.	A / C	UNIT WT. / QTY.
	15	PAD PLATE 12MM OD500/ID360	2-80-655-15975		ASTM A 182 GR.F316L	C	14 | 130 1
	14	PAD PLATE 6MM OD300/ID118	2-80-655-15975		ASTM A 182 GR.F316L	C	4 | 239 1
FBF6321Z026ZZZZZZ	13	BLIND FLANGE. CL.150 FF/125AARH 28"	2-80-655-16009	5	--- ASTM A 516 GR.70	C	56 | 455 1
----	12	BRANCH PIPE OD355.6X9.53 L=500	2-80-655-15975		--- ASTM A 106 GR.B	C	40 | 615 2
GKBDR22Z01302ZZZZ	11	GASKET JOB STD EXPANDED PTFE CORD 150# 7MM THK - 4"	2-80-655-15975		---- ----		--|-- 2
FWC0121Z01318ZZZZ	10	WN FLANGE CL.150 4"	2-80-655-15975		--- ASTM A 105	C	7 | 000 2
GKFDR22Z02602ZZZZ	09	GASKET JOB STD EXPANDED PTFE CORD 150# 7MM THK - 28"	2-80-655-15975		---- ----		--|-- 1
---	08	NUT 5/8" UNC	2-80-655-15975		---- A194 GR.2H		0 | 033 64
---	07	STUD 5/8" UNC L=171MM	2-80-655-15975		---- A193 GR.B7		0 | 269 32
FNF6321Z026ZZZZZZ	06	FLANGE.SO CL.150 FF/125AARH 28"	2-80-655-16008	05	--- ASTM A 516 GR.70	C	34 | 825 1
WDMBZ41Z0265405ZZ	05	P.F MITRE BEND OD711X6	2-80-655-16010	04	--- ASTM A 516 GR.70		179 | 383 2
P121917Z01318ZZZZ	04	BRANCH PIPE OD114.3X6.02 L=204	2-80-655-15975		--- ASTM A 106 GR.B	C	3 | 275 1
P18Y613Z02654ZZZZ	03	P.F PIPE OD711X6 L=2273	3-80-655-35452	05	--- ASTM A 516 GR.70	C	236 | 920 1
P18Y613Z02654ZZZZ	02	P.F PIPE OD711X6 L=2810	3-80-655-35452	04	--- ASTM A 516 GR.70	C	292 | 892 1
P18Y613Z02654ZZZZ	01	P.F PIPE OD711X6 L=5194	3-80-655-35452	03	--- ASTM A 516 GR.70	C	541 | 273 1

CUSTOMER: INDIAN OIL CORPORATION LIMITED (HALDIA)

CONSULTANT: ENGINEERS INDIA LIMITED (EIL) NEW DELHI

NAME OF PROJECT: BS-VI, HALDIA

BHEL CUSTOMER NO: 7419

BHARAT HEAVY ELECTRICALS LTD., PIPING CENTRE, CHENNAI 600 017

	NAME	SIGN	DATE	NO OF ITEMS
DRN	E.PYRIA	-sd-	27.02.19	
CHD	SARAVANAN.C	-sd-	27.02.19	
APPD	KVR	-sd-	27.02.19	

REV	DATE	ALTERED / APPROVED		ZONE	REVISION MARKED AS
02	13.05.19	E.PYRIA	KVR		DRAWING REVISED AS PER LATEST EIL DRAWING. 02
01	29.04.19	M.P.K	TRINADH		DRAWING REVISED AS PER MAIL FROM EIL DT: 24.04.19 01

N

DEPT. | CODE | GRADE OF UN TOL. DIM: C/M/F | SCALE | WEIGHT (Kg). | ITEM No.

TITLE: EIL DRAWING NO: 28-P-205-2405-K24A-IH-E

CARD CODE: U 01

DRAWING No.: 2-80-655-15975

REV: 02

SIZE A2

V: A2